FOG Photonics,inc

One Idealphotonics Technology Company

PART NUMBER :QAD-1000L
PRICE:1200USD/EA
LEAD TIME:IN STORE

QAD-1000L InGaAs Quadrant APD Detector

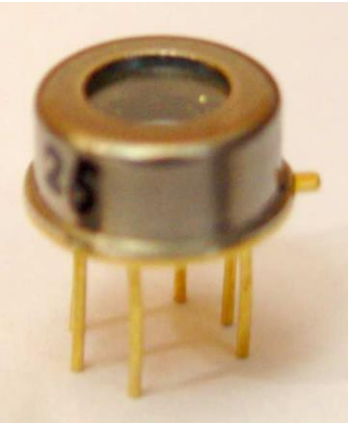

DESCRIPTION

InGaAs Quadrant APD Detector, high sensitivity photo-diode for use in infrared instrumentation and sensing applications. High spectral response in the region 800 nm to 1700 nm. The photosensitive area is 1mm in diameter. Planar-passivated device structure.

FEATURES

Top illumination planar APD
Narrow Element gap,
Low Crosstalk,
Good Reponsivity homogeneity of each Quadrant

Application

Laser guidance、
Laser positioning、
Laser navigation、
Laser range finder.

ABSOLUTE MAXIMUM RATINGS (T=25°C)

Operating voltage	0.99×VBR	Operating temperature	-50~+85 ℃	Power dissipation	100mW
Forward current	10mA	storage temperature	-55~+100 ℃	Soldering temperature(time)	260℃（10s）

OPTICAL AND ELECTRICAL CHARACTERISTICS (T=25°C)

Parameters	Sym	Test conditions	Min	Yyp	Max	Unit
Response Spectrum	λ	—	1000~1700			nm
Active diameter	φ	—	1000			μm
Element Gap		—	100			μm
Reponsivity	Re	λ=1.55μm,φe=1μw, M=10	9.0	9.5		A/W
Maximum multiplication gain	M		20			
Crosstalk	SL	M=10			10%	
Response time	ts	f=1MHz,RL=50Ω		1.5	3.0	ns
Dark current	ID	M=10		25	100	nA
Reverse breakdown voltage	VCC	IR=100uA			60	V
Capacitance				12	15	pF
Operating voltage temperature coefficient	δ	Tc=-40～+85℃		0.10	0.15	V/℃

TYPICAL CHARACTERISTICS

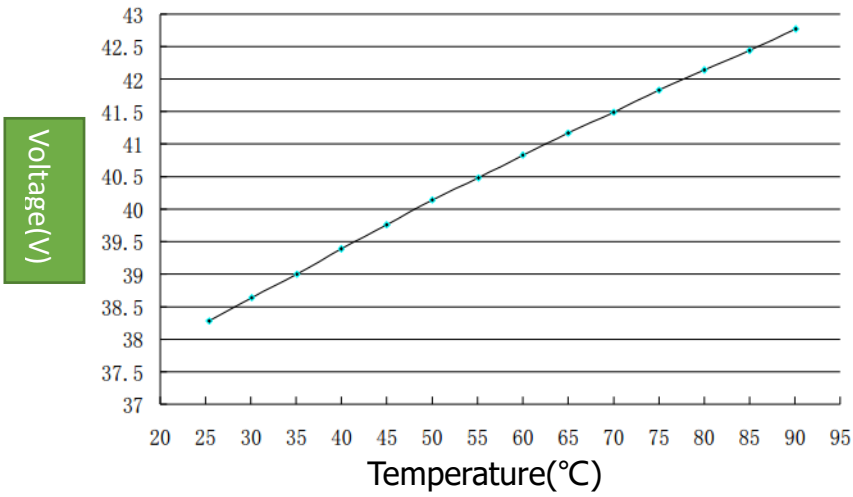

Fig. 1 Breakdown Voltage vs. Temperature

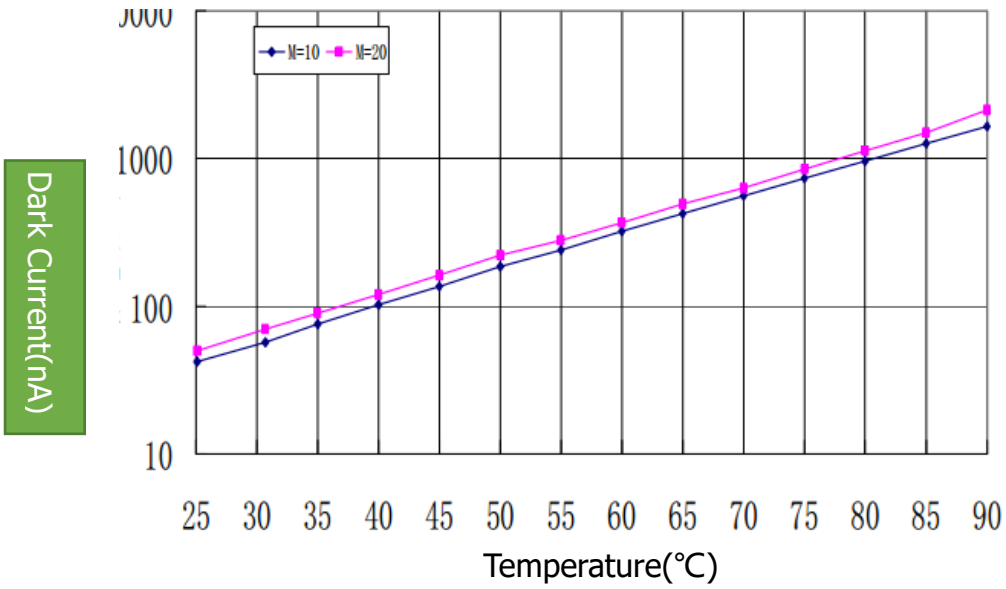

Fig. 2 Dark Current vs. Temperature

DIMENSIONAL OUTLINE

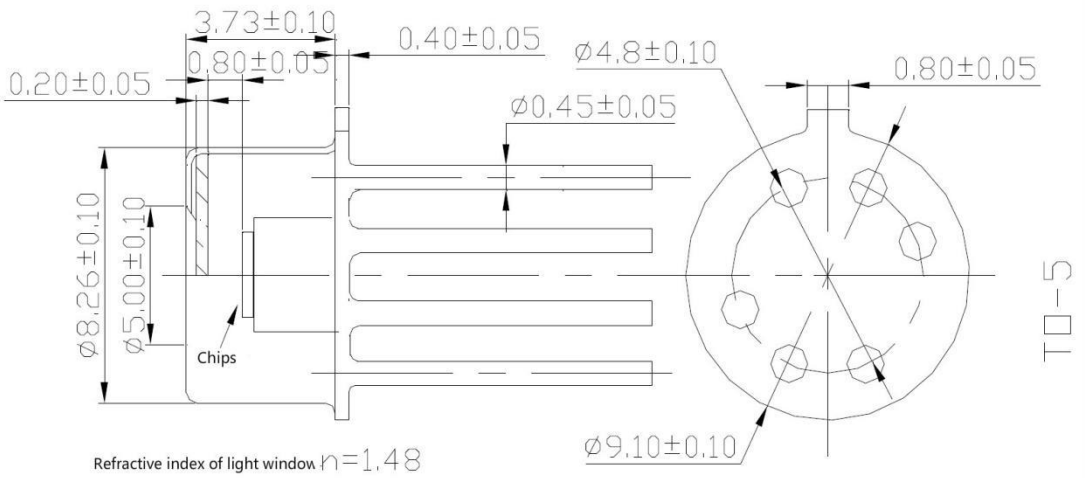

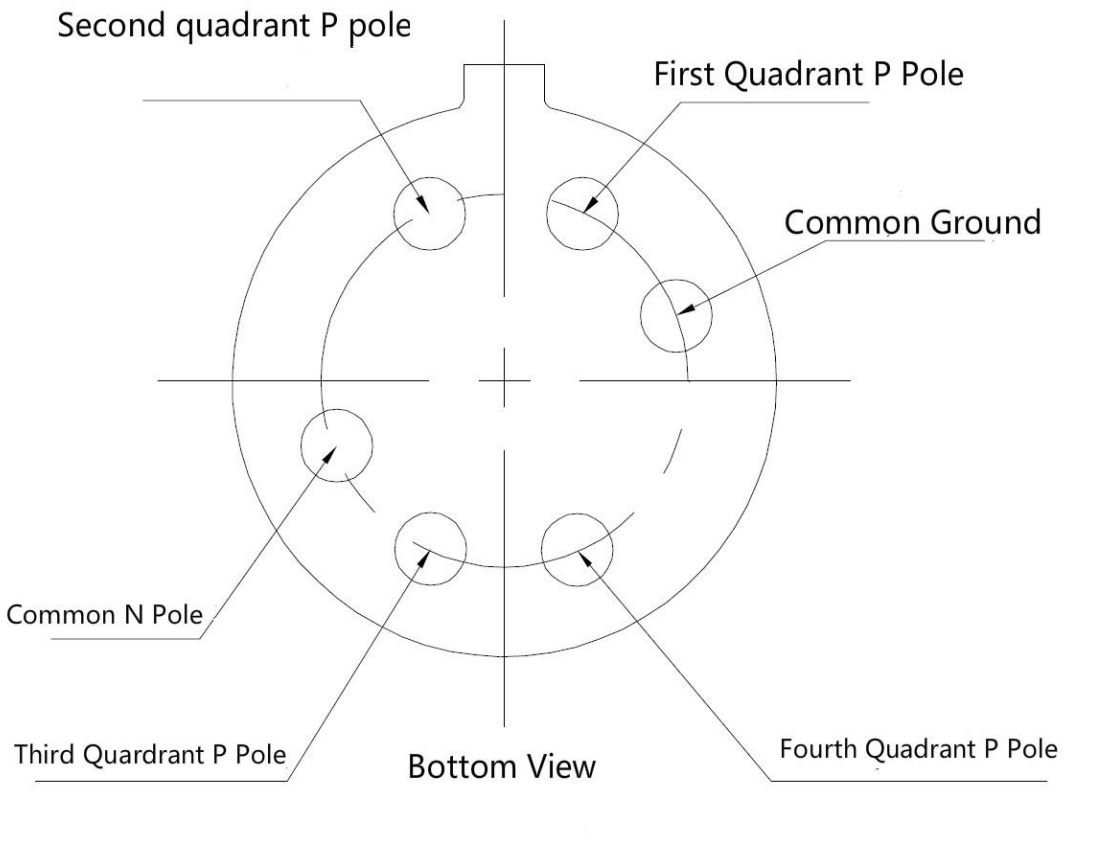

Electric circuit

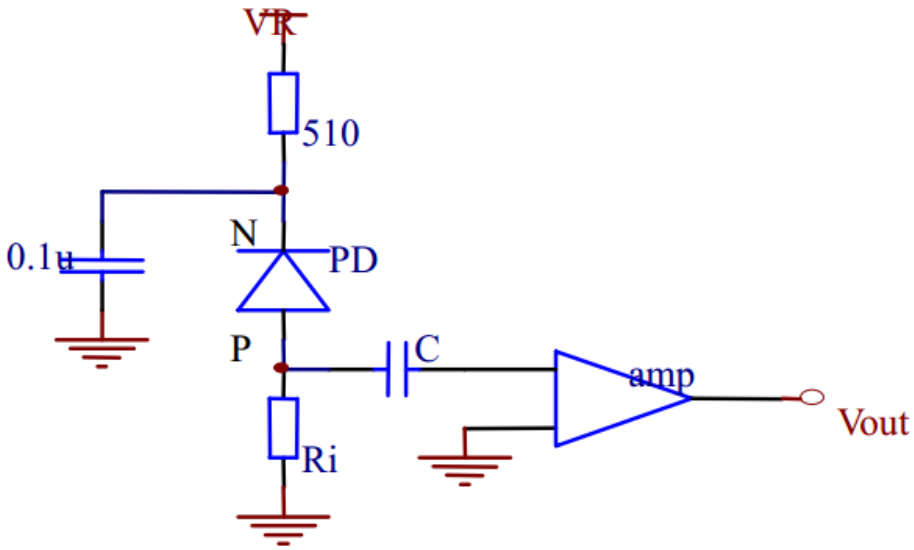

The package and lead

— This detector need feedback of voltage temperature when operating.

— The suitable ESD protecting mersures are recommend in storage,transporting and using.

607, 6/F, Jumbo Ind Bldg, 189 Wai Yip Street, Kwun Tong, KLN ,HK

(852) 30786684

(852)35902333

info@fogphotonics.com

www.fogphotonics.com